Al Qana Project Lifting Permit

Exact Location:	
Ref. Lifting plan #:	
Permit No.:	
Activity details:	

Date:	
Job Performer:	
Crane Operator:	
Rigger:	

Work Assessment Checklist			
		YES	NO
1	THE LIFTING TEAM IS AWARE AND HAS A COPY OF THE VALID LIFTING PLAN FOR THIS ACTIVITY		
2	THE CRANE HAS A VALID 3RD PARTY CERTIFICATION		
3	THE CRANE OPERATOR HAS A VALID 3RD PARTY CERTIFICATION		
4	THE RIGGER HAS A VALID 3RD PARTY CERTIFICATION		
5	RIGGING EQUIPMENT HAVE A VALID 3RD PARTY CERTIFICATE		
6	RIGGING EQUIPMENT VISIUALLY CHECKED AND ARE FREE FROM DEFECTS, SWL IS CLEAR		
7	INSPECTION CHECKLIST FILLED BY THE OPERATOR AND NO MALFUNCTIONS MENTIONED		
8	TOOLBOX TALK MEETING RECORDS ARE AVAILABLE		
9	CRANE SET ON LEVEL GROUND AND RIGGERS FULLY EXTENDED, PLACED ON WOODEN MATS?		
10	PICK-UP AND DROP PATHS INDENTIFIED?		
11	IS THE LIFT AREA AROUND THE CRANE CONTROLLED & BARRICADED?		
12	UNDER GROUND SERVICES IDENTIFIED?		
13	ABOVE GROUND OBSTRUCTION AND OVERHEAD POWER LINES IDENTIFIED?		
14	WIND SPEED IS BELOW 38 KM/HR (20.5 KNOTS). When in doubt, HSE department must be requested to measure wind speed		

RESPONSIBLE PERSON (Activity Engineer or Supervisor)

I declare that all requirements are in place before work commences and all the above information are verified and shall be respected at all times. And work shall be carried on as per approved lifting plan for this specific task.

Job Performer:	Signature:	Date:

HSE Department (HSE representative)

I have personally visited the location of the work and confirm that all precautions identified in the Lifting plan and this permit are being applied and I authorize the work.

HSE representative:	Signature:	Date:

Al Qana Project Lifting Permit

Permit No.: _____ Lifting Plan Ref no.: _____ Activity Details.: _____

Permit revalidation

Revalidation shall only be done after the work location has been visited. If any of the items mentioned in the work assessment checklist was changed or requirements of the lifting plan not followed, then the work shall be stopped until it is rectified.

Date	Time	Exact Location	Responsible person	Signature	HSE representative	Signature

Lifting Plan Ref. #: _____

Al Qana Project

MOBILE CRANE – LIFT PLAN

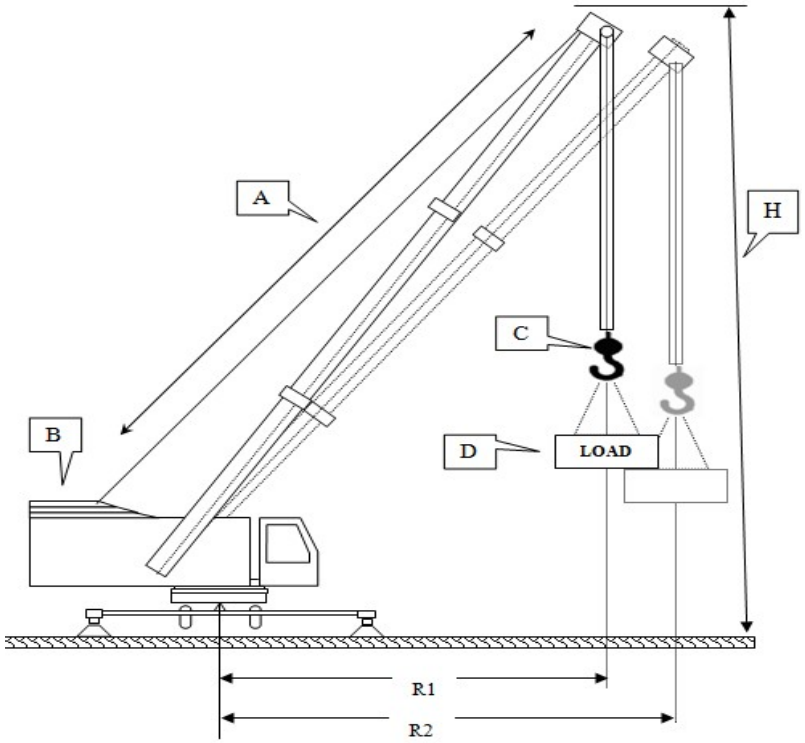

Type of crane:	Mobile	Crawler
Crane Serial No.:		
Crane weight:		
Crane reg no:		
Crane Capacity:		

i) Activity description:

ii) CALCULATION العمليات الحسابيه

All Below numbers should be based on the worst case scenario (highest load weight, longest boom length, longest radius…)

A	=MAIN BOOM LENGTH (Meters) طول ذراع الرافعه الرئيسي	
R1	=PICK-UP RADIUS(Meters) المسافه بين الرافعه و الحموله	
R2	=PLACING RADIUS(Meters) المسافه بين الرافعه و مكان التنزيل	
B	=COUNTER WEIGHT (KGS) وزن الثقل الخلفي للرافعه	
C	=HOOK BLOCK WEIGHT(KGS) وزن الخطاف	
D	=LOAD TO BE LIFTED(KGS) وزن الحموله	
E	=TOTAL LOAD (C+D)(KGS) الوزن الأجمالي(الخطاف+الحموله)	
*F	=LOAD CHART CAPACITY(KGS) استطاعة الرافعه لرفع الحوله	
%	CAPACITY $\frac{(E \times 100)}{F}$ نسبةالوزن الأجمالي إلى استطاعة الرافعه	

*LOAD CHART CAPACITY (F) SHALL BE CONSIDERED FOR R1 OR R2, WHICHEVER IS GREATER.

Rigging connection to:	Fixed point		Free connection
Sling material/capacity :			
Type of Hitch:	Basket	Choke	Vertical
Outrigger spread:			
Matting dimensions:			

	Prepared By (ENGINEER)	Reviewed By (Project Manager)
Name		
Date		